DO NOT SCALE - IF IN DOUBT, ASK

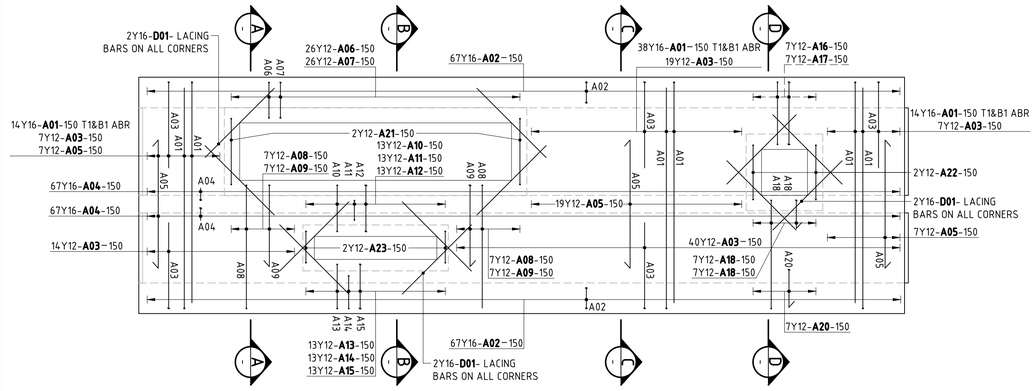

PLAN-ROOF SLAB TRANSVERSE REINFORCING
1:40

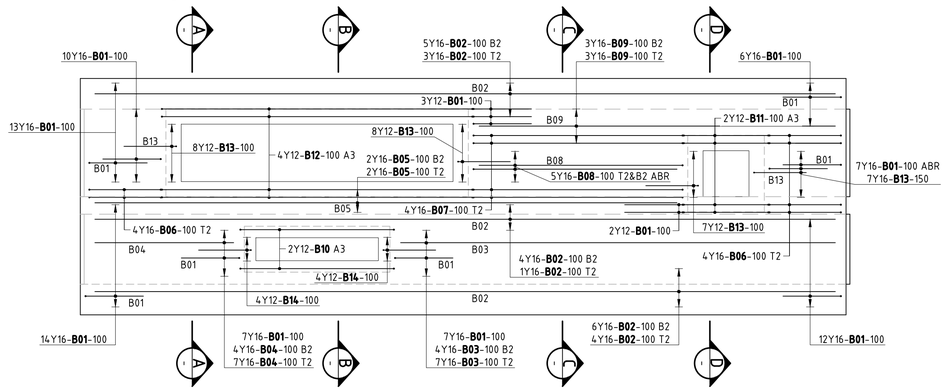

PLAN-ROOF SLAB LONGITUDINAL REINFORCING
1:25

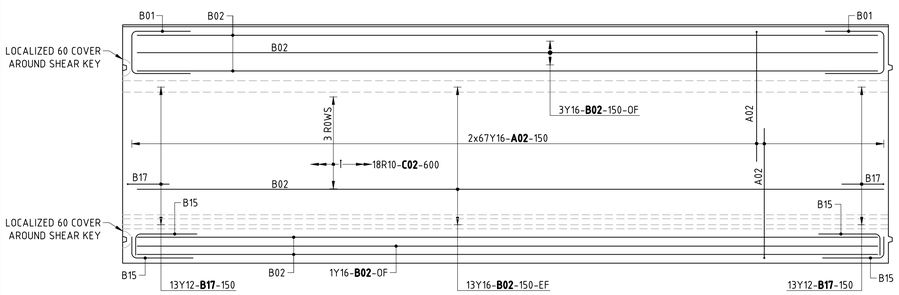

SECTION E
1:40

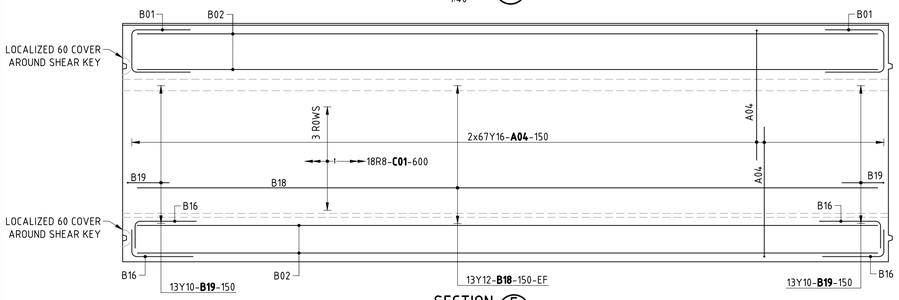

SECTION F
1:40

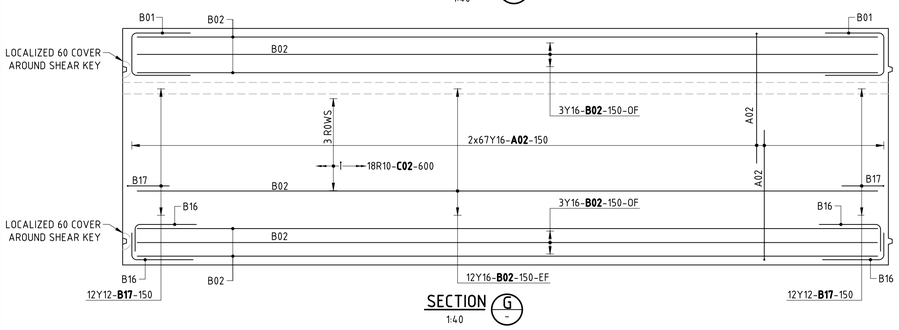

SECTION G
1:40

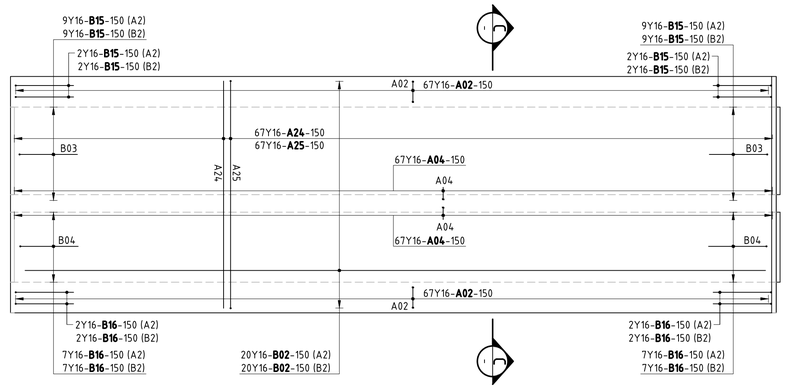

PLAN-FLOOR SLAB REINFORCING
1:40

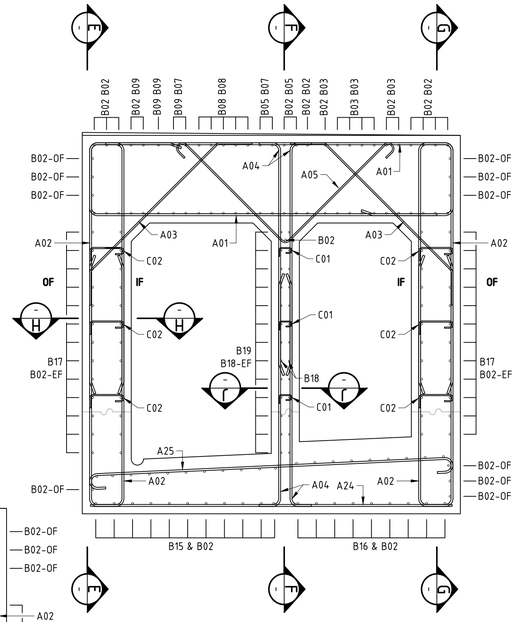

SECTION C
1:25

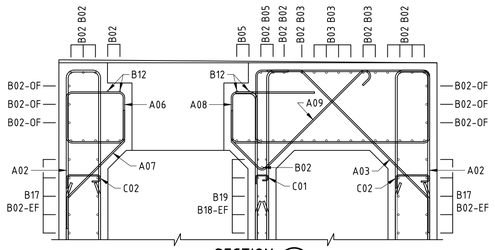

SECTION A
1:25

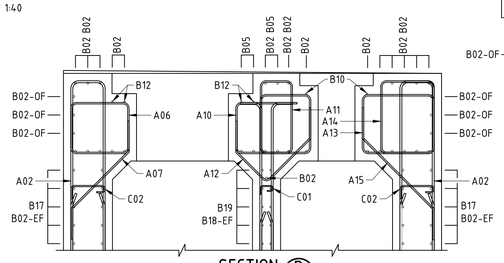

SECTION B
1:25

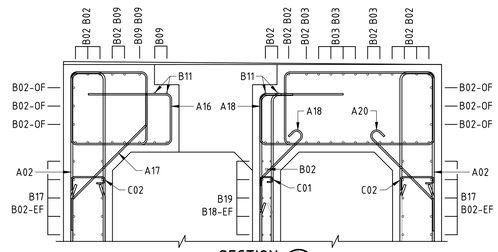

SECTION D
1:25

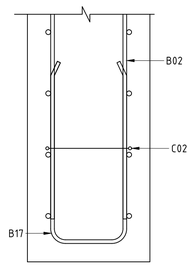

SECTION H
1:10

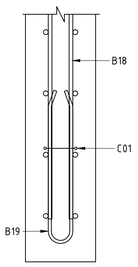

SECTION J
1:10

DRAWING NO.	REFERENCE
1785-CO-090-C-SCH-0015-03	BENDING SCHEDULE
1785-CO-090-C-DWG-0003-07	SERVICE TUNNELS SECTIONS AND DETAILS

REFERENCE DRAWINGS

Engineers

ZAA ENGINEERING PROJECTS & NAVAL ARCHITECTS

P O Box 26546
HOUT BAY 7872
Tel: +27(21) 791 9100
E-Mail: zaaepna@zaaepna.com

31 Melkhout Crescent
Hout Bay 7806
Fax: +27(21) 790 4470

PROJECT NO	DIS CODE	AREA	DISP	TYPE	DRG NO	SHEET	STATUS	REV
1785	CO	090	C	DWG	0015	03	T	0A

NO.	DESCRIPTION	BY	CHK'D	APP'D	DATE
0A	ISSUED FOR TENDER	DC	MC	JZ	2019.07.26

REVISIONS / ISSUE AUTHORIZATION

This Document including all design and information therein is Confidential Intellectual Property of ZAA Engineering Projects and Naval Architecture (Pty) Ltd. Copyright and all other rights are reserved by ZAA. This Document may only be used for its intended purpose.

EPCM CONSULTANT: TNPA			
TITLE	NAME	SIGNATURE	DATE
LEAD DES. ENG.			
ENG. COORD.			
ENG. MANAGER			
AREA MANAGER			
PROJECT MGR.			
DIVISION			
DIV.	TITLE	NAME	SIGNATURE / DATE

ORIGINATOR: ZAA			
TITLE	NAME	SIGNATURE	DATE
DRAWN	DC	DC	19 07 26
CHECKED	MC	MC	19 07 26
ENG. COORD.			
DISCIP. ENG.			
ENG. MANAGER			
AREA MANAGER			
PR.ENG. / PR.TECH.			
NAME	J. ZIETSMAN		DATE
SIGNATURE			19 07 26
REG. NUMBER	760293		
SCALE :			AS NOTED A1

Transnet National Ports Authority
237 MAHATMA GANDHI ROAD
DURBAN
P.O. BOX 31683, DURBAN
TEL: 031 361 8852

TRANSNET

PORT OF DURBAN

DCT BERTHS 203 to 205 RECONSTRUCTION DEEPENING AND LENGTHENING

TYPE A3 SERVICE TUNNEL REINFORCING DETAILS

PROJECT NUMBER	DV	FBS	DIS.	TYPE	DRG. NO.	SHT.	REV.	ID
212283	01	090	C	GA	1014	03	0A	DC